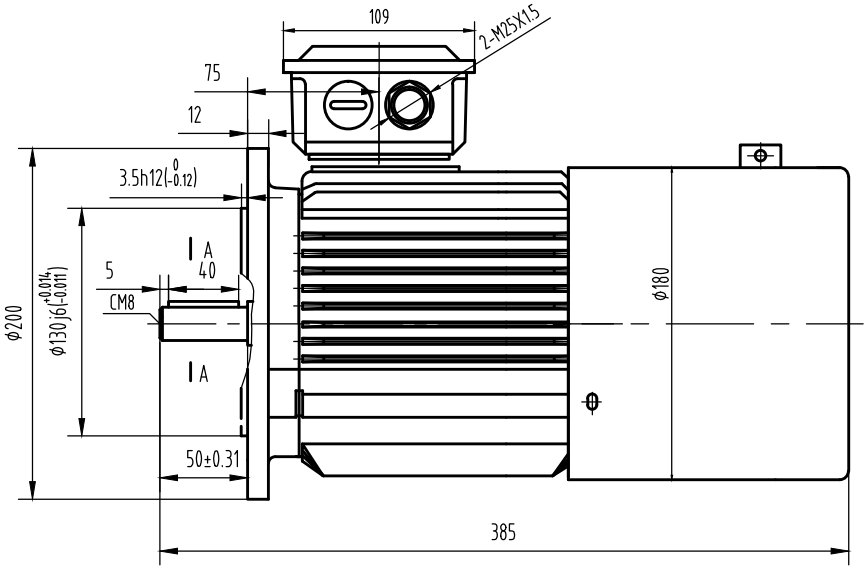

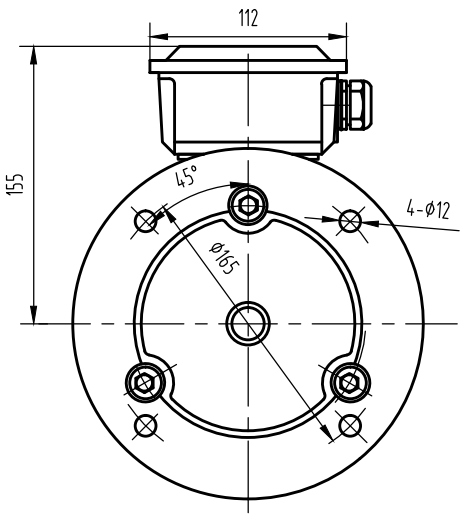

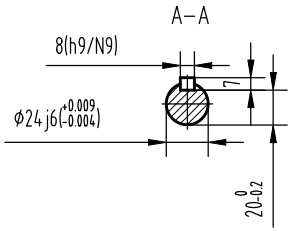

Mark	No.	Zone	File changing No.	Signature	Date

Design			Standard		
Check					
Auditing					
Technics			Approval		

Sign	Weight	Scale
		1:4
Total page	page No.	

OUTLINE

OMV0-090S0-04~08P B5

Wuxi OMEC LTD.